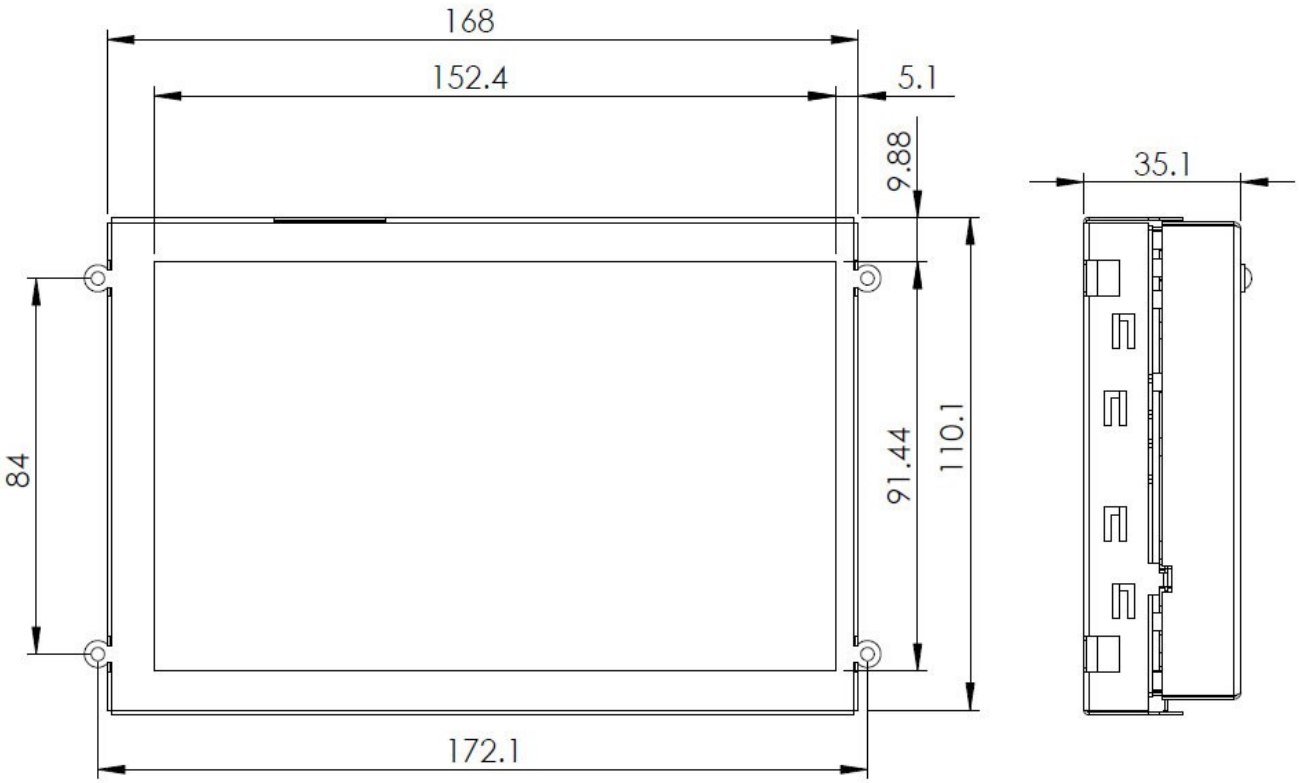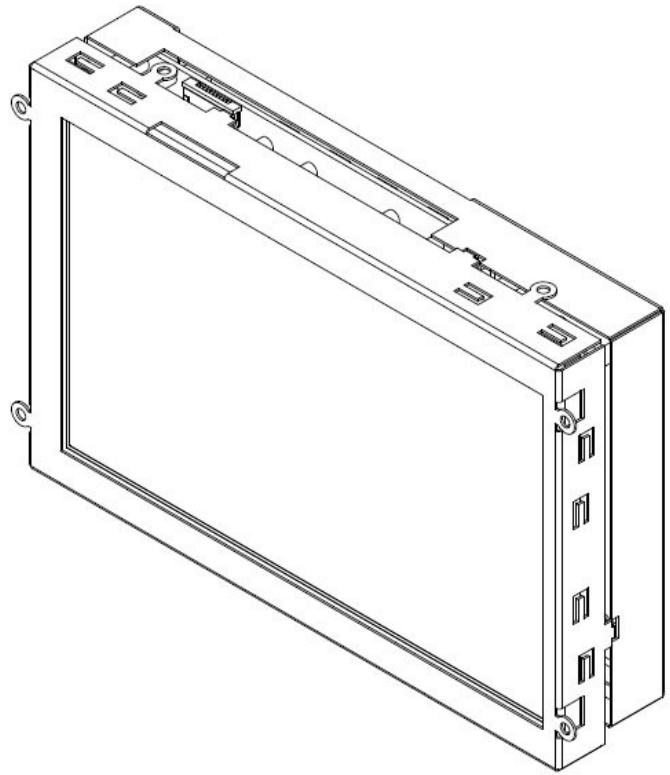
168
152.4
5.1
9.88
35.1
84
91.44
110.1
172.1